UPLIFT ILLUMINATE LED TASK LIGHT

UPLIFT DESK®

Specifications

SIDE VIEW
open

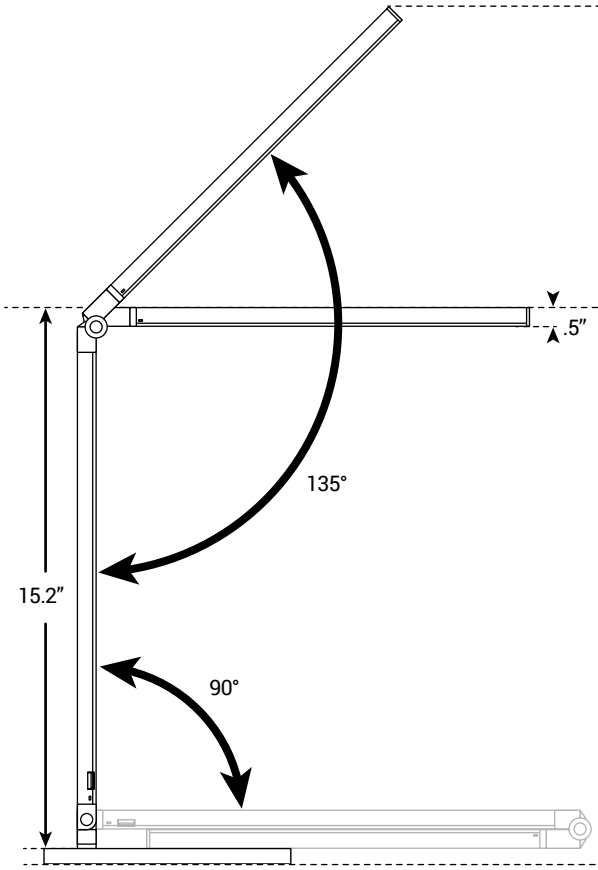

FRONT VIEW
open

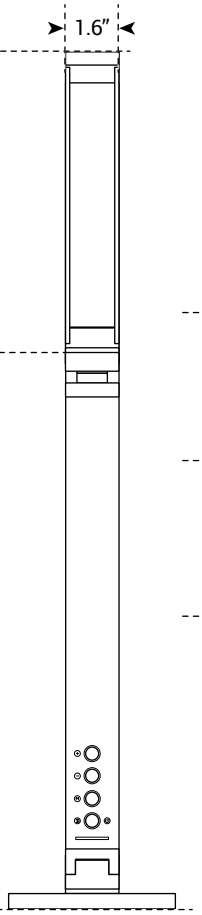

LAMP ROTATION
45° in either direction

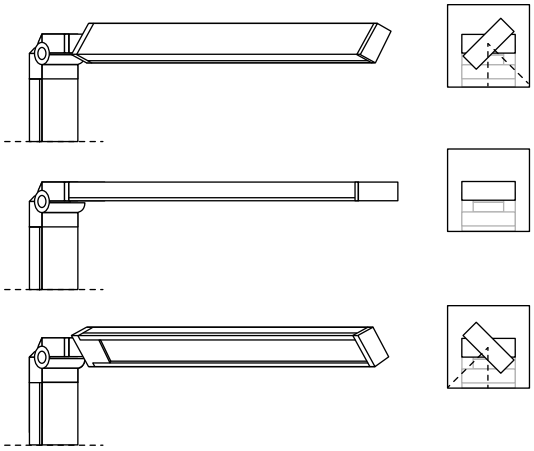

SIDE VIEW
closed

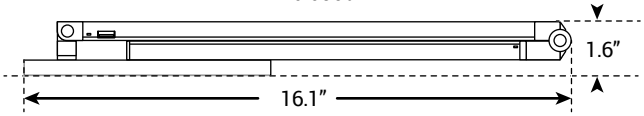

TOP VIEW
closed

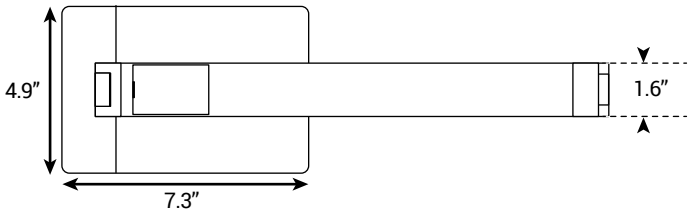

CAPABILITIES

Light Temperature ..... Cool: 6000k
Warm: 3000k
Natural: 4500k

USB output 5V 1000mA

Max Wattage ..... 10 W

Angle adjustment ..... Chimney 90°, Lamp 135°

Warranty ..... 1 year

FEATURES

- High-performance LED components make a more concentrated light
- Three available color temperature modes - Cool, Warm and Natural
- Features five grades of brightness strength
- USB output for charging your phone or tablet
- Low-level power consumption 90 percent more efficient than that of an incandescent light
- Long service lifespan of over 35,000 hours